Technical Data Sheet

Henley Basin Mixer - T261102

ROPER RHODES®

No.	Description	Code	Fixings Included
1	Henley Basin Mixer	T261102	YES

Min Pressure:	0.3bar
0.2bar	6.5 litres / min
0.3bar	8.1 litres / min
0.4bar	9.4 litres / min
0.5bar	10.3 litres / min
1bar	11.64 litres / min

Dimensions - T261102

Diagrams not to scale. All dimensions in mm (tolerance of +/-5mm)

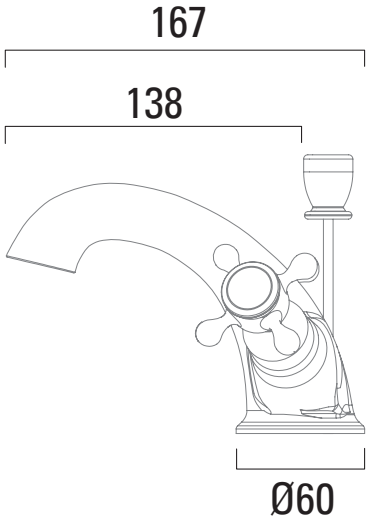

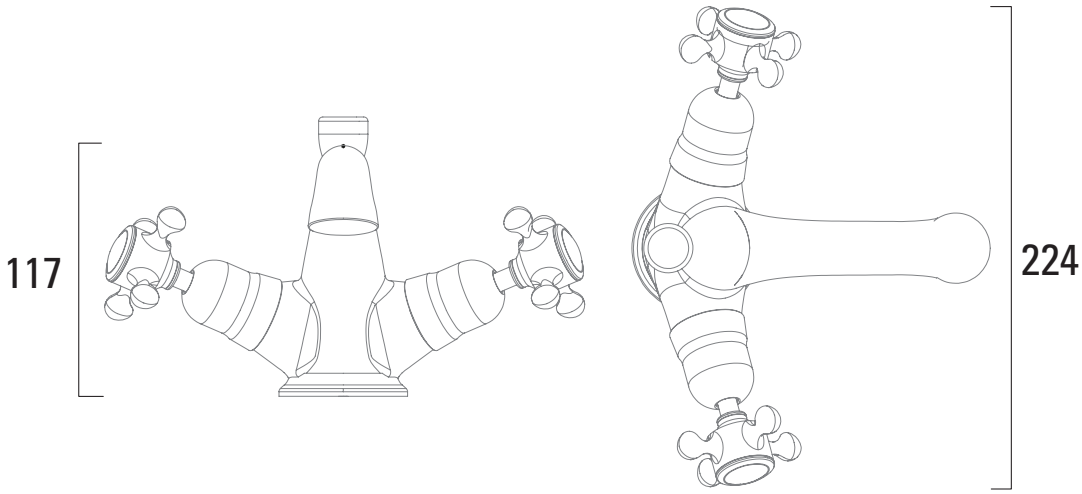

*Dimensions are subject to change, customers are advised to measure actual product before commencing installation.

FAQs

What is the size of the tap tail connection? The tap tails have a standard 1/2” BSP fixing.

What bore is the tap tail? The tails have a 10mm internal bore.

What length are the tap tails? The tails are 300mm in length.

Does the tap come fitted with an aerator? Yes, the aerator comes pre-installed but can be replaced.