abode

# Matrix R0

## 1.0 Bowl

stainless steel

**Fitting type:** Undermount **Sink handing:** Not handed **Finish style:** Brushed steel

- **Min. base unit (bowl, tap & overflow only):** 450 mm
- **Packaged size L x W x D:** 570 x 520 x 275mm
- **Supplied boxed or sleeved:** Boxed
- **Boxed weight:** 5.84 kg
- **Sink only weight:** 3.58 kg

- Thick gauge 18/10 stainless steel construction throughout
- Uber square rectilinear styling
- Deep bowl(s) to accept larger cookware
- Smooth lined luxury Orbit waste supplied as standard
- Stylish zero radius construction

## Included parts:

1 x AX1001 (m)
90mm (1.5") Orbit manual basket strainer waste - short bolt

1 x AX1006 (m)
Rectangular overflow pipework

1 x AX1008 (m)
1.0 Bowl pipework

1 x AX4001 (m)
Fitting & care instructions & data sheet - st/st undermount

2 x AX1017 (m)
Undermount fixing clips x 4

## Recommended accessories:

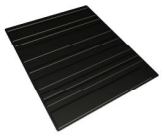

1 x AX2501
Silicone drainer mat 330 x 390mm

1 x AX1503
Theorem Colander

1 x AX3006
Bowl mat 316 x 376 R5

1 x AX2502 or AX2503
High & Dry drainer rack - Green & grey or White & grey

All accessories can be purchased directly from www.abode-shop.co.uk or phone 01226 283434

**Materials and workmanship warranty summary:**

- Sink materials & workmanship 10 years.
- Waste kits 1 year.
- Connecting pipework 1 year.

**Care instructions:**

- Clean the products regularly using soapy water and a non abrasive cloth, regular cleaning will prevent the build up of lime scale and dirt.
- Avoid contact with corrosive or abrasive substances.
- After cleaning rinse thoroughly with clean water then dry.
- For more detail see supplied booklet or www.abodedesigns.co.uk

**19/09/2016 -** This sheet is a summary of the product information full details are available on request, errors & omissions excepted, details are subject to change without prior notification. www.abodedesigns.co.uk

**Product order code: (AW5008)**

**Product dimensions and installation information:** note: symbol indicates position of acoustic pad on stainless products.

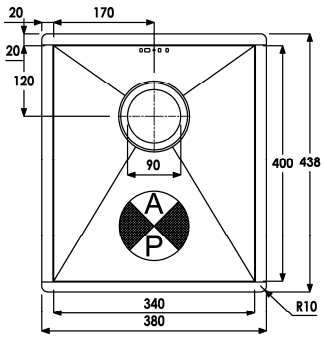


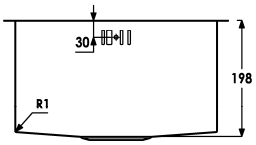


UNDERMOUNT CUT OUT

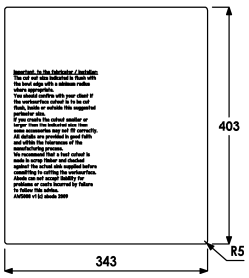


**Adittional notes:** Important: Please check cut out details carefully before cutting worktops, size shown is flush to bowl edge
**Overall product size:** 380 x 438 x 205 corner radius 10mm

**Taphole(s) detail:** None
**Compatability with large square taps:** No known incompatibilities
**Wastehole(s) detail (mm):** 90 / N/A / N/A (nb. 90mm wastes accept a waste disposal unit)

**Min. base unit (refers to space required for bowl, tap and overflow only):** fits 450mm carcass
**Min. Recessed fitting width:** required (bowl(s), tap and overflow: 340mm
***Worktop cut out size:** 343x403 corner radius 5mm, for .DXF cut files please see www.abode.eu
**Min. & Max worktop depth or clip depth reach range:** 0 - 5mm
**Fitting temple supplied?** No, use cut out instructions as supplied
**Dishwasher under drainer?** Distance from top of worktop to underside of the drainer 0mm

***Important, fabricator / installer notes for undermount & flushmount sinks:**

The cut out size indicated is aligned with outside edge of the bowl top radius (see example below).

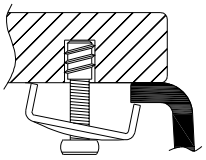

You should confirm with your client if the worksurface cutout is to be cut flush, inside or outside this suggested perimeter shape & size.

If you create the cutout smaller or larger than the indicated size then the fit of the accessories may be affected and should be physically checked.

**General:**

All details are provided in good faith but do not include the tolerances of the material or manufacturing process.

**We request that a test cutout is made in scrap timber and checked against the actual sink to be installed before committing to cutting the final worksurface.**

**Abode can not accept liability for problems or costs incurred by failure to follow this request.**

Note: the dimensions on ceramic fireclay products are subject to wider tolerances due to the nature of this natural material and the firing process.

CAD cutout files can be downloaded from www.abodedesigns.co.uk

**Bowl details:** (sizes in mm unless specified otherwise)

**Bowl 1 (typically main bowl):**

**Bowl 1 size L x W x D (mm):** 340 x 400 x 198
**Bowl 1 construction:** Welded, 1.00mm
**Bowl 1 floor radius (mm):** 1
**Bowl 1 Wastehole diameter (mm):** 90
**Bowl 1 overflow:** Slotted, barcode pattern
**Bowl 1 texture:** Brushed stainless
**Bowl 1 apx. volume (litres):** 21.20

**Bowl 2 (typically ½ or ¾ bowl):**

**Bowl 2 size L x W x D (mm):** N/A x N/A x N/A
**Bowl 2 construction:** N/A, N/Amm
**Bowl 2 floor radius (mm):** N/A
**Bowl 2 Wastehole diameter (mm):** N/A
**Bowl 2 overflow:** N/A
**Bowl 2 texture:** N/A
**Bowl 2 apx. volume (litres):** N/A

**Bowl 3:**

**Bowl 3 size L x W x D (mm):** N/A x N/A x N/A
**Bowl 3 construction:** N/A, N/Amm
**Bowl 3 floor radius (mm):** N/A
**Bowl 3 Wastehole diameter (mm):** N/A
**Bowl 3 overflow:** N/A
**Bowl 3 texture:** N/A
**Bowl 3 apx. volume (litres):** N/A